Glutz

Access Since 1863

80226 E Protection Fitting

Public - Steel - Narrow

CE | EN 179 | EN 1906 KL 4 | DIN 18251-1 | IP55 | RFID | M

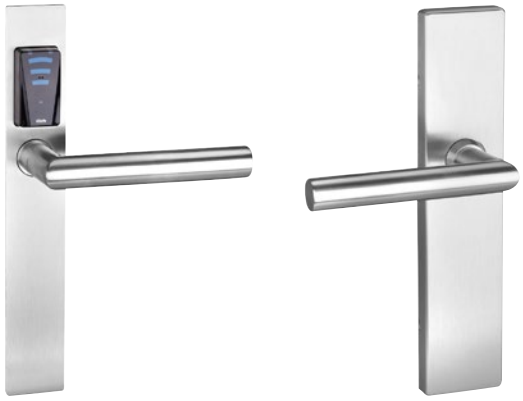

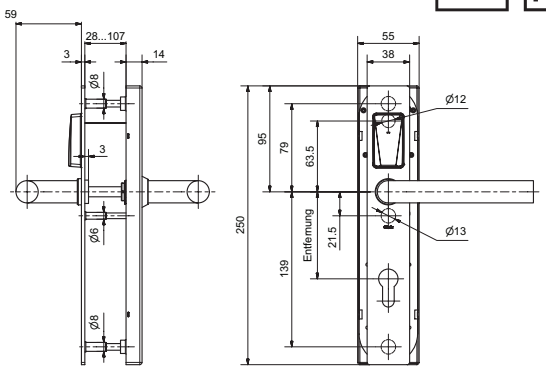

Product profile

Battery-operated electronic security plate for interior and exterior solid-leaf doors. Opening and closing from outside take place with contact reading of the RFID-medium. Door opening is always assured with the interior lever handle; EN179-compliant with suitable lever handle

Scope of supply

- E-fitting incl. square spindle
- Lever handle pair
- Screw set
- 4 x AAA lithium battery
- Quick guide

Standard version

- For DIN left-hand/right-hand doors
- Identification via RFID Mifare DESfire EV 1 (ISO 14443A)
- Programming via media or wireless access (868 MHz)
- Outside lever handle coupled, lever handle blocked

80226 · 1 · 2 3 · 4 · 5 6 · 7 · 8 · 9

1 Power supply	2 Cut-out outs. 3 Cut-out ins.	4 Distance	5 Lever handle design	6 Square spindle	7 Surface	8 Door thickness	9 Protection rose
00 Lithium Battery	**0** Blind	**00** Blind	**11** 5057 Thun	**8** 8 mm	**00** Satin stainless steel	**01** 34 to 43 mm	**00** Blind
11 External, bus	**2** RZ	**70** 70 mm	**12** 5062 New Orleans	**5** 8,5 mm	**11** Polished stain. steel	**02** 44 to 53 mm	**01** Steel 7 mm
	3 PZ	**72** 72 mm	**13** 5064 Oslo	**9** 9 mm	**22** Polished brass	**03** 54 to 63 mm	**02** Steel 9 mm
	4 PRZ	**74** 74 mm	**14** 5066 Savannah		**33** Satin brass	**04** 64 to 73 mm	**03** Steel 10 mm
		78 78 mm	**15** 5071 Memphis		**44** Anti-bacterial	**05** 74 to 83 mm	**04** Steel 11 mm
		85 85 mm	**16** 5087 Basel		**55** Wrought iron look	**06** 84 to 93 mm	**05** Steel 13 mm
		88 88 mm	**17** 5098 Olten		**99** Spec. execution	**07** 94 to 103 mm	**06** Steel 15 mm
		90 90 mm	**18** 5038 Lugano			**08** 104 to 113 mm	**07** Steel 17 mm
		92 92 mm	**35** 5040 Merkur				**08** Steel 19 mm
		94 94 mm	**37** 50040 Merkur				**09** Steel 21 mm
			40 50070 Appenzell				**10** Steel 23 mm
			41 50071 Appenzell				**11** Cylinder cut-out 3 mm
			99 Spec. execution				

RZ: 74, 78, 90, 94 mm; PZ: 70, 72, 78, 85, 88, 90, 92 mm; PRZ: 74, 78, 90, 94 mm